MILLHOG®

SERIES: Dictator II

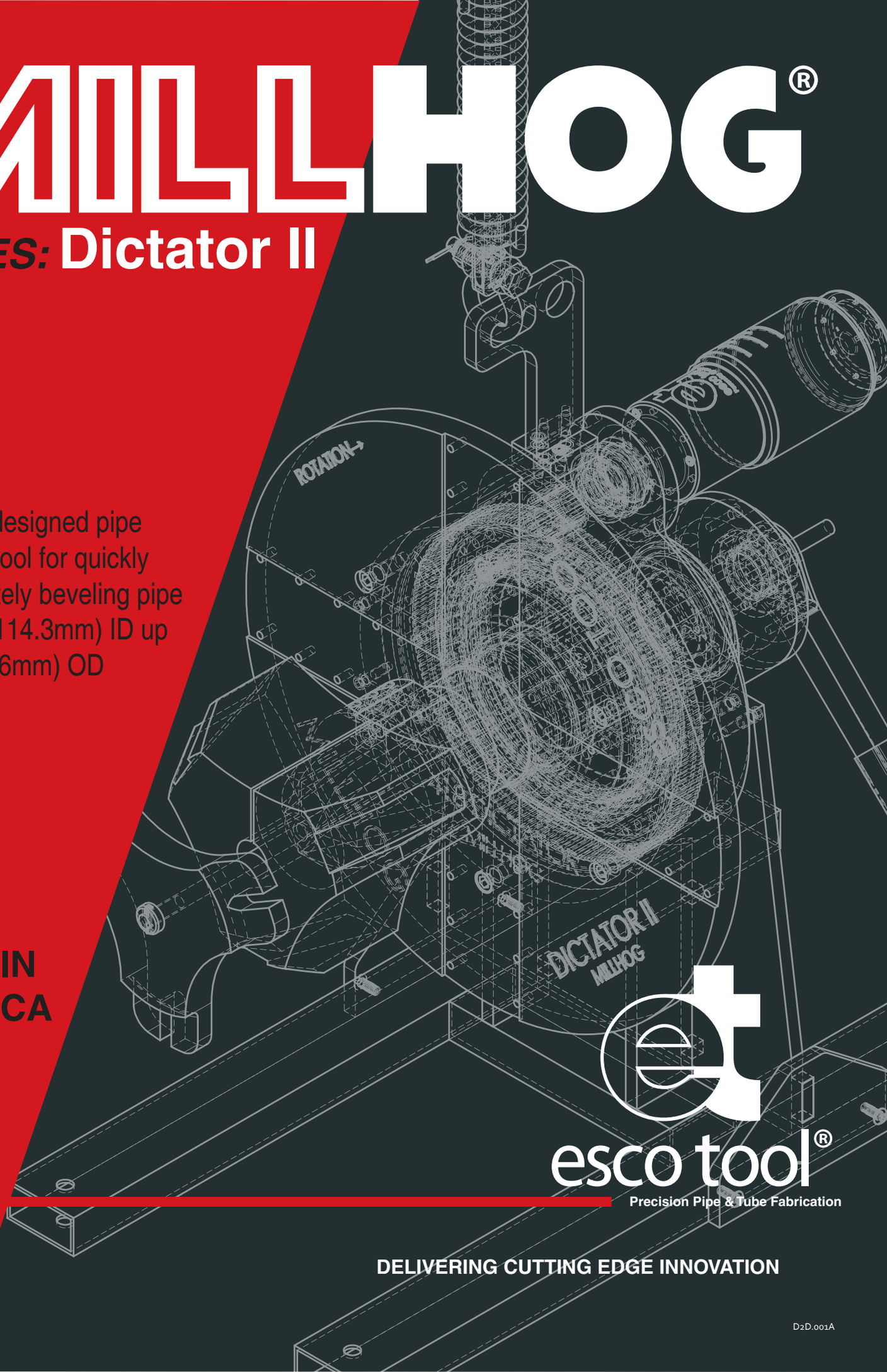

Our newly designed pipe fabrication tool for quickly and accurately beveling pipe sizes 4.5” (114.3mm) ID up to 24” (609.6mm) OD

MADE IN AMERICA

esco tool®

Precision Pipe & Tube Fabrication

DELIVERING CUTTING EDGE INNOVATION

D2D.001A

Dictator II

MILLHOG®

MILLHOG SERIES: Dictator II
I.D. Clamping Pipe Beveling Tool
4.5" I.D. to 24" O.D.
114.3 mm I.D. to 609.6 mm O.D.

Bevels heavy wall pipe as an affordable alternative to specialized machines

Safety Spring Hanger and multi-position goose-neck Lift Bracket allow the tool to hang straight depending on tool configuration for easy mounting and release.

The Dictator II MILLHOG performs any degree of bevel on pipe from 4.5" (114.3mm) I.D. to 24" (609.6mm) O.D. up to 2" (50.8mm) wall, without cutting fluid while assuring maximum cutter blade life. It has wide self-centering clamps that produce a superior clamping force for chatter-free bevels on all types of highly alloyed pipe.

As an upgrade to the original dictator, the Dictator II uses a wedge and actuator combined with an expanded cutterhead to cover its large range. In addition to the enlarged cutting and clamping hardware, the Dictator II kit comes with our patented Safety Spring Hanger, a multi-position goose-neck hoist, and a powder-coated stand for easy manueverability and storage.

Key Features

- One mandrel/wedge and 8 sets of clamps cover the entire range
- Wide clamps spread contact for superior clamping force and rigidity
- Three powerful motor choices that are easily switched and interchangeable with the commander pneumatic, electric and hydraulic
- Available gear box lowers rpm and doubles the torque at the cutter blade
- The EscoLock cutter blade holding system holds the blades securely in place to produce a thick chip for fast pipe beveling
- Bevels super duplex and heavy alloyed pipe
- Patented Safety Spring hanger and multi-position goose-neck hoist ensure accurate alignment when clamping
- Sturdy, powder-coated stand for easy storage
- Low maintenance dual opposed tapered roller bearing design provide years of trouble free service
- Fully portable for on-site use

Compound bevel, face, and bore on 24" carbon steal pipe, 2" wall and wall variance of 1/4"

Drive Options & Specs

Working Range	4.5in (114.3mm) I.D. to 24in (609.6mm)		
Motor	**Pneumatic**	**Electric**	**Hydraulic**
	3 hp (2237 W) 90 psi (6.2 bar) 95 cfm (2690 lt/min)	120 V AC 50/60 Hz 1800 W, or 230 V AC 50/60 Hz 1800W	5 HP / 8-12 gpm (pump) @ 1500 psi (102 bar) 20 gallon reservoir
Speed	15 rpm	13 rpm - 45 rpm	1rpm - 14 rpm
Speed w/ Gear Reducer	7.5 rpm	6.5 rpm - 22.5 rpm	1rpm - 7 rpm
Tool Length (no stand)	30in (762mm)	30in (762mm)	30in (762mm)
Max Working Weight	265 lbs (120.2 kg)	267 lbs (120.2 kg)	268 lbs (120.2 kg)
Shipping Weight	503 lbs (228.2 kg)	505 lbs (229.1 kg)	506 lbs (229.5 kg)
Shipping Dimensions	41in x 25.5in x 40in 1041.4mm x 647.7mm x 1016mm	41in x 25.5in x 40in 1041.4mm x 647.7mm x 1016mm	41in x 25.5in x 40in 1041.4mm x 647.7mm x 1016mm

The tools are shown with the included patented safety Spring Hanger and Lift Bracket. This innovative hanger provides a perceptible feel that the tool is aligned and centered to the pipe as the clamps tighten. The safety chain prevents the possibility of over extending the spring and provides a failsafe catch in the event of a spring failure.

The Gear Box reduces the rpm and doubles the torque at the Cutter Blade for beveling stainless steel and highly alloyed pipe when using the pneumatic or hydraulic motors and for all electric motor applications.

Kits come with a sturdy, powder-coated stand for easy storage and placement, while the Dictator II is not in use.

Pneumatic

Hydraulic

Pneumatic
with Gear Box

Electric
with Gear Box

Hydraulic
with Gear Box

esco tool • 75 October Hill Road • Holliston, MA 01746 USA • 1.508.429.4441 • fax 1.508.429.2811 • email: millhog@escotool.com

Available for Sale or Rent • www.escotool.com

Dictator II

MILLHOG®

MILLHOG SERIES: Dictator II
I.D. Clamping Pipe Beveling Tool
4.5" I.D. to 24" O.D.
114.3 mm I.D. to 609.6 mm O.D.

Clamp System Features

- Only 8 sets of clamps for entire range
- All clamps work on the Mandrel/Wedge
- All key clamping components, including Draw Rod are heat treated and hardened

Unrivaled Clamping Stability and Reliability

MILLHOG® innovative V shaped Clamp Pads make six contact points with the pipe I.D. for unrivaled clamping stability and reliability. All 8 sets of clamps work on both mandrel and wedge. Heat treated and hardened steel Pad Corners are used on the Clamp Pads where they make contact with pipe I.D. for maximum durability. When they eventually wear out, they are easily and economically replaced.

Clamp Rib Sets D-01, D-02 d D-03
Clamp Pad Sets D-04, D-05, D-06, D-07 and D-08
and Retention Spring D-14

Clamp Rib and Pad selection chart and Hardware

Dictator	Rib	I.D. Range (in)		I.D. Range (mm)		Mandrel / Wedge		Draw Rod	Actuator		Retention Spring
		Min	Max	Min	Max	Part #	Size (in)		Part #	Roll Pin	
	D1	4.50"	5.625"	114.3mm	142.9mm	D-37	4	D-15	D-12	D-13	D-14
	D2	5.50"	6.625"	139.7mm	168.3mm	D-37	4	D-15	D-12	D-13	D-14
	D3	6.50"	7.625"	165.1mm	193.7mm	D-37	4	D-15	D-12	D-13	D-14
	D2 & D4 Pad	7.50"	8.625"	190.5mm	219.1mm	D-37	4	D-15	D-12	D-13	D-14
	D3 & D4 Pad	8.50"	9.625"	215.9mm	244.5mm	D-37	4	D-15	D-12	D-13	D-14
	D2 & D5 Pad	9.50"	10.625"	241.3mm	269.9mm	D-37	4	D-15	D-12	D-13	D-14
	D3 & D5 Pad	10.50"	11.625"	266.7mm	295.3mm	D-37	4	D-15	D-12	D-13	D-14
	D2 & D6 Pad	11.50"	12.625"	292.1mm	320.7mm	D-37	4	D-15	D-12	D-13	D-14
	D3 & D6 Pad	12.50"	13.625"	317.5mm	346.1mm	D-37	4	D-15	D-12	D-13	D-14
	D2, D6 & D7 Pads	13.50"	14.625"	342.9mm	371.5mm	D-37	4	D-15	D-12	D-13	D-14
	D3, D6 & D7 Pads	14.50"	15.625"	368.3mm	396.9mm	D-37	4	D-15	D-12	D-13	D-14
	D2 & D8 Pad	15.50"	16.625"	393.7mm	422.3mm	D-37	4	D-15	D-12	D-13	D-14
	D3 & D8 Pad	16.50	17.625"	419.1mm	447.7mm	D-37	4	D-15	D-12	D-13	D-14
Dictator II	**Rib**	**I.D. Range (in)**		**I.D. Range (mm)**		**Mandrel / Wedge**		**Draw Rod**	**Actuator**		**Retention Spring (x2)**
		Min	**Max**	**Min**	**Max**	**Part #**	**Size (in)**		**Part #**	**Roll Pin**	
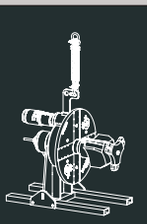	D1	10.50"	12.26"	266.7mm	311.4mm	D24-02	10	DII-06	DII-04	134-4616	D-14
	D2	11.25"	13"	285.8mm	330.2mm	D24-02	10	DII-06	DII-04	134-4616	D-14
	D3	12.24"	14"	310.9mm	355.6mm	D24-02	10	DII-06	DII-04	134-4616	D-14
	D2 & D4 Pad	13.15"	14.89"	334.0mm	378.2mm	D24-02	10	DII-06	DII-04	134-4616	D-14
	D3 & D4 Pad	14.31"	15.88"	363.5mm	403.4mm	D24-02	10	DII-06	DII-04	134-4616	D-14
	D2 & D5 Pad	15.07"	16.8"	382.8mm	426.7mm	D24-02	10	DII-06	DII-04	134-4616	D-14
	D3 & D5 Pad	16.05"	17.78"	407.7mm	451.6mm	D24-02	10	DII-06	DII-04	134-4616	D-14
	D2 & D6 Pad	17.07"	18.79"	433.6mm	477.3mm	D24-02	10	DII-06	DII-04	134-4616	D-14
	D3 & D6 Pad	18.04"	19.77"	458.2mm	502.2mm	D24-02	10	DII-06	DII-04	134-4616	D-14
	D2, D6 & D7 Pads	19.01"	20.72"	482.9mm	526.3mm	D24-02	10	DII-06	DII-04	134-4616	D-14
	D3, D6 & D7 Pads	19.98"	21.69"	507.5mm	550.9mm	D24-02	10	DII-06	DII-04	134-4616	D-14
	D2 & D8 Pad	20.97"	22.67"	532.6mm	575.8mm	D24-02	10	DII-06	DII-04	134-4616	D-14
	D3 & D8 Pad	21.93"	23.63"	557.0mm	600.2mm	D24-02	10	DII-06	DII-04	134-4616	D-14

Tool Post and Tool Post screws
D-52 and D-55

Tool Post, Blade Locks and Screws

Tool Post			Tool Post Screws		Blade Lock		Lock Screw	
Part #	Size	Per Tool	Part #	Per Post	Part #	Per Post	Part #	Per Lock
D-52	5.125"	2	D-55	4	D-54	6	D-53	1

The available third and fourth tool post are optional (tool comes with 2 posts and holds a maximum of 4)

Blade Lock Screw and
Blade Lock D-54 and D-53

Hardware

Main hardware components are listed below. Tool comes with all neccessary mounting screws and wrenches.

A. *10.5" Actuator*
B. *Draw Rod*
C. *10" Wedge*
D. *10" Wedge Key*
E. *Mandrel Wiper*
F. *21.5" Cutterhead*
G. *Spring Hanger Assembly*
H. *Lift Bracket Assembly*
I. *Stand*

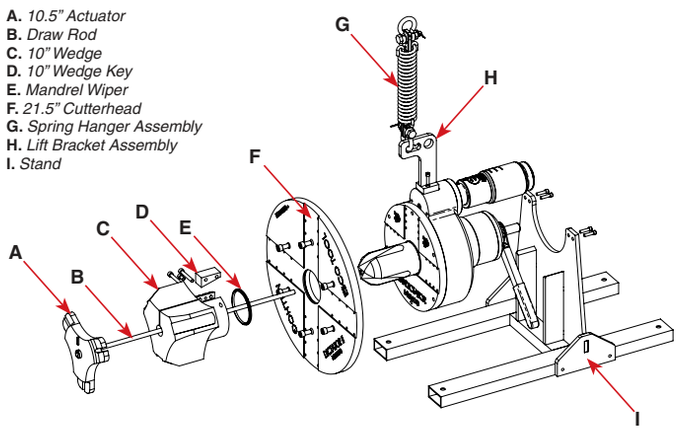

Tool Dimensions

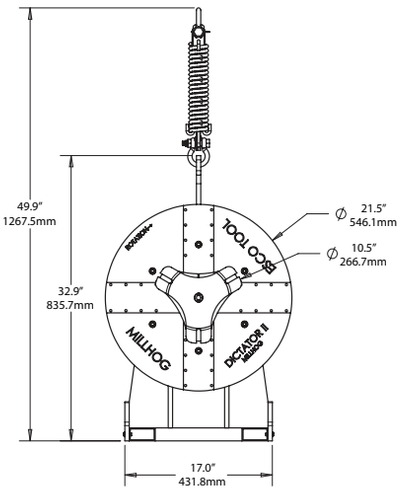

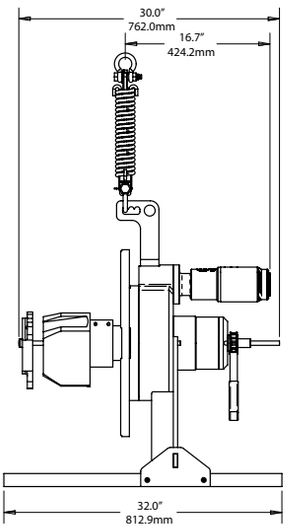

esco tool • 75 October Hill Road • Holliston, MA 01746 USA • 1.508.429.4441 • fax 1.508.429.2811 • email: millhog@escotool.com
Available for Sale or Rent • www.escotool.com

MILLHOG®

Portable Tools for Cutting, Beveling and Facing Tube, Pipe and Flanges

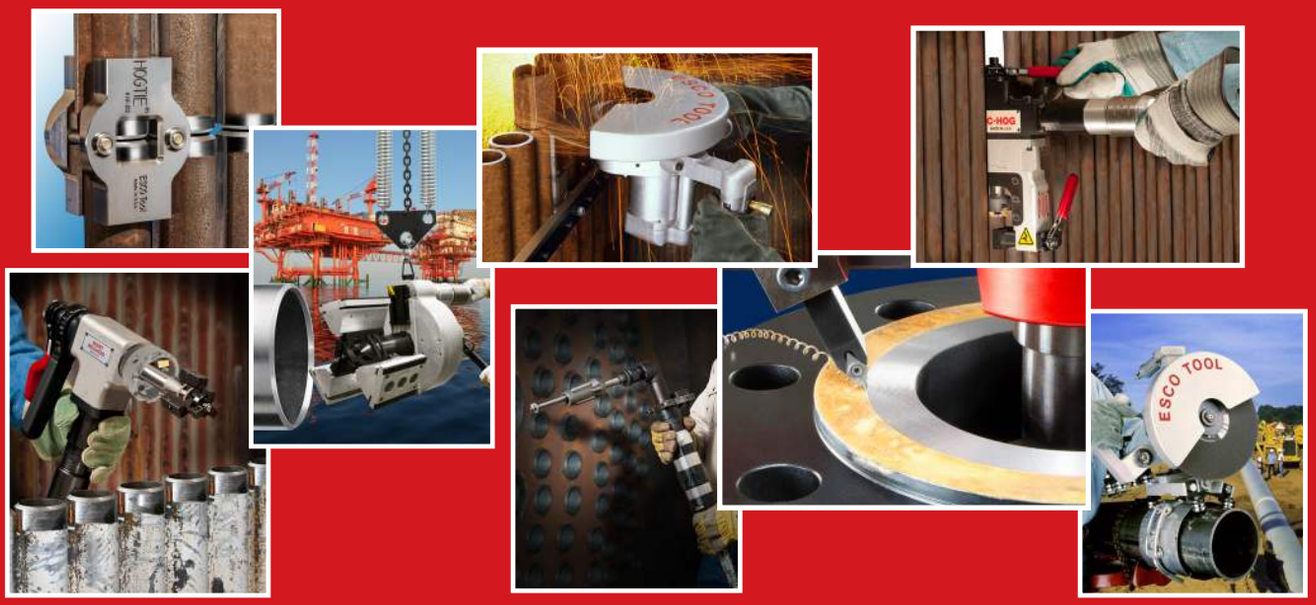

Manufacturer and Market Leader
We Deliver Cutting Edge Innovation

Contact us or your local representative to schedule a demo today

esco tool®

ESCO TECHNOLOGIES, INC.
75 October Hill Road • Holliston, MA 01746 USA
1.508.429.4441 • fax 1.508.429.2811
email: millhog@escotool.com
Available for Sale or Rent • www.escotool.com

D2D.001A